The Retail Market

Retail Market Design

Introduction

- The following presentation is a brief description of the processes and procedures involved in the Retail Market Design.
- This document has been created with new market entrants in mind to provide an overview of how the design functions with short descriptions of key processes and key learning points.

Agenda

- Recap Structure of the Retail Market
- Ownership of the design
- Scope of the Design
- Market Processes
  - Market Messages
  - MPD's
  - Documentation
- QH & NQH
- DUoS Billing
- Addresses
- Key Learning Points

Recap: Structure of the Retail Market

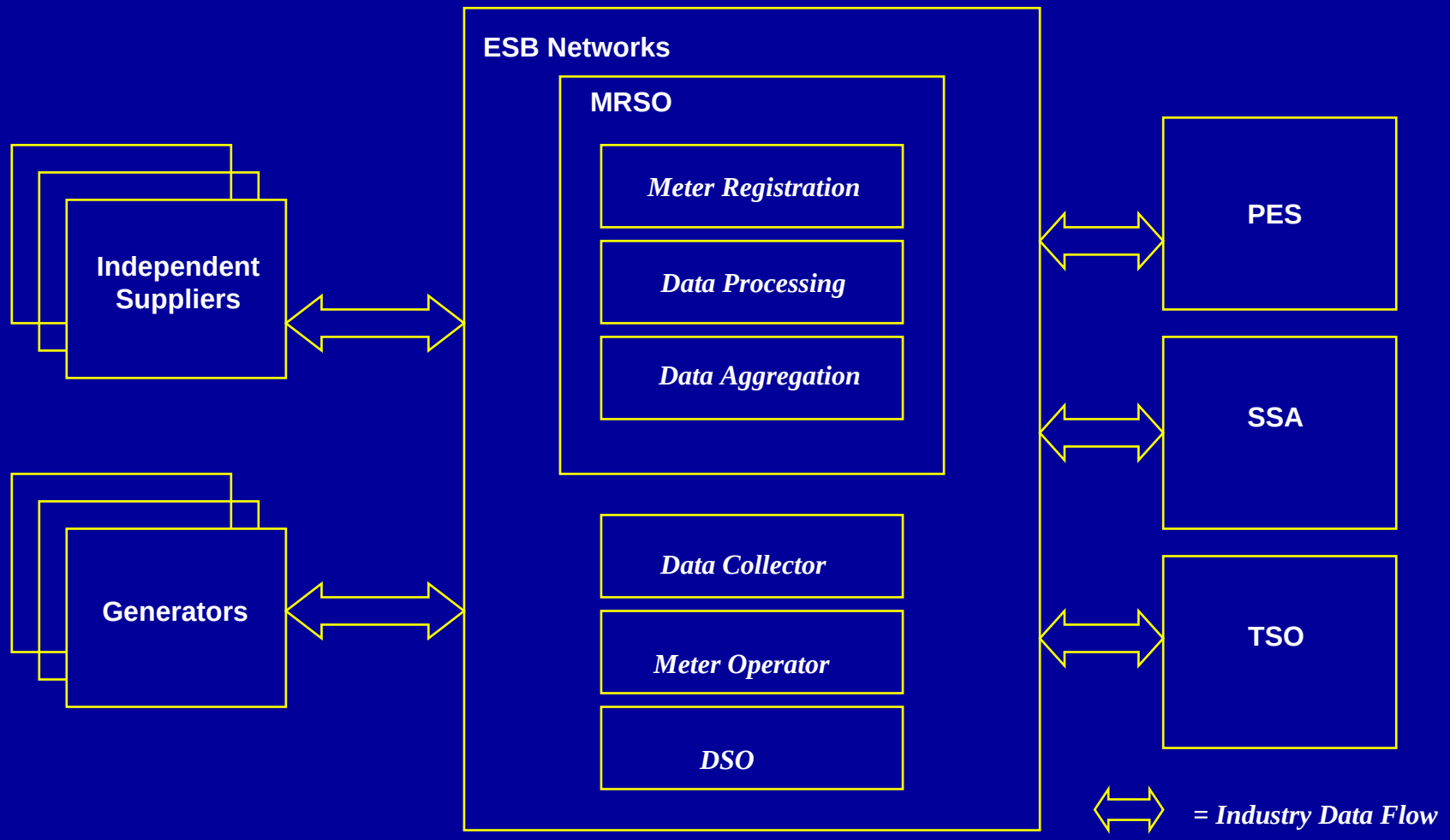

Ownership of the Design

- The design of the Retail Market was constructed by the MOIP (Market Opening IT Programme) team and approved for implementation by CER
- Since Go Live there have been a number of releases which are basically changes or amendments to the system design
- All design documentation must firstly be approved by CER before being implemented or issued to the Market Participants
- Any changes to the design of the market are firstly discussed at the IGG (Industry Governance Group) and must be approved by CER before they can be implemented

Scope of the Design

- The Market Design ranges from a high level end to end view of each market process to a detailed view of each market message.
- The market design covers the detail of how the whole messaging process works with a detailed description of the lifecycle of each market message.
- Agreed Retail Market Design consists of:
  - Market Process Diagrams
  - Data Transfer Catalogue
  - Market Message Implementation Guides
  - Briefing Papers

Scope of the Design

- **Data Transfer Catalogue** is an Access Database comprising:
  - Complete listing of all data items on market messages including definitions and formats
  - Compilation of these items into the 89 market messages (17 sent by suppliers, 64 sent to suppliers)
  - List of valid codes allowed for all codified fields
- Market Message Implementation Guides
  - Series of 10 documents providing guidance on message composition, validations performed on messages etc

Scope of the Design

- Briefing Papers
  - Covers areas such as Data Aggregation, processing of NQH reads
  - Available on RMIG web-site (www.rmig.cer.ie)
    - Username: RMIG
    - Password: fuinnimh

- Market Process Diagrams (MPDs)

  34 Market Process Diagrams grouped in a number of main areas:
  - Change of Supplier
  - New Connections
  - Data Processing and Aggregation
  - Customer data information
  - Meter works
  - Unmetered

Market Messages

- Market Messages are sent from MPs to ESB Networks or from Networks to MPs in a number of different instances
- Some of the most common messages sent by MPs to Networks would involve the following requests:
  - Change of Supplier (CoS)
  - New Registration
  - Meter Works
  - Change of Customer Details
- Market Messages sent from Networks to MPs would often be in response to MP requests or to provide data and information for billing purposes.

Market Processes

- The Market Processes are documented at a high level diagrammatically
- There is also supporting descriptive text to explain in more detail.
- Full detail on Market Process Documentation can be found on the RMIG website: http://www.rmig.cer.ie

Market Process Documents (MPDs)

- There are 34 MPDs in total to date and any new process requires an MPD to be documented
- The MPDs detail the messages required in each process and show the chain of events in flowchart format that take place from when the process begins to its culminating in the request being carried out
- The preceding slides provide a high level walkthrough of the following processes:
  - Change of Supplier
  - New Connections
  - Data Processing and Aggregation
  - Customer data information
  - Meter works
  - Unmetered

Key Processes

- Change of Supplier
- New Connections
- Data Processing and Aggregation
- Customer data information
- Meter works
- Unmetered

QH, NQH & Unmetered Sites

- QH (Quarter Hourly) site is generally defined as being a high consumption site where meter reads are taken on a quarter hourly basis and sent to Networks via a 341 market message. QH meter points must have a kW import and kVAr import channel.

- NQH (Non Quarter Hourly) site is defined as being a low level consumption site where the meter reads are taken less frequently.

- Unmetered site is defined as being all those sites which electricity is supplied to but do not contain meters, for example street lights.

Change Of Supplier (MPD 1)

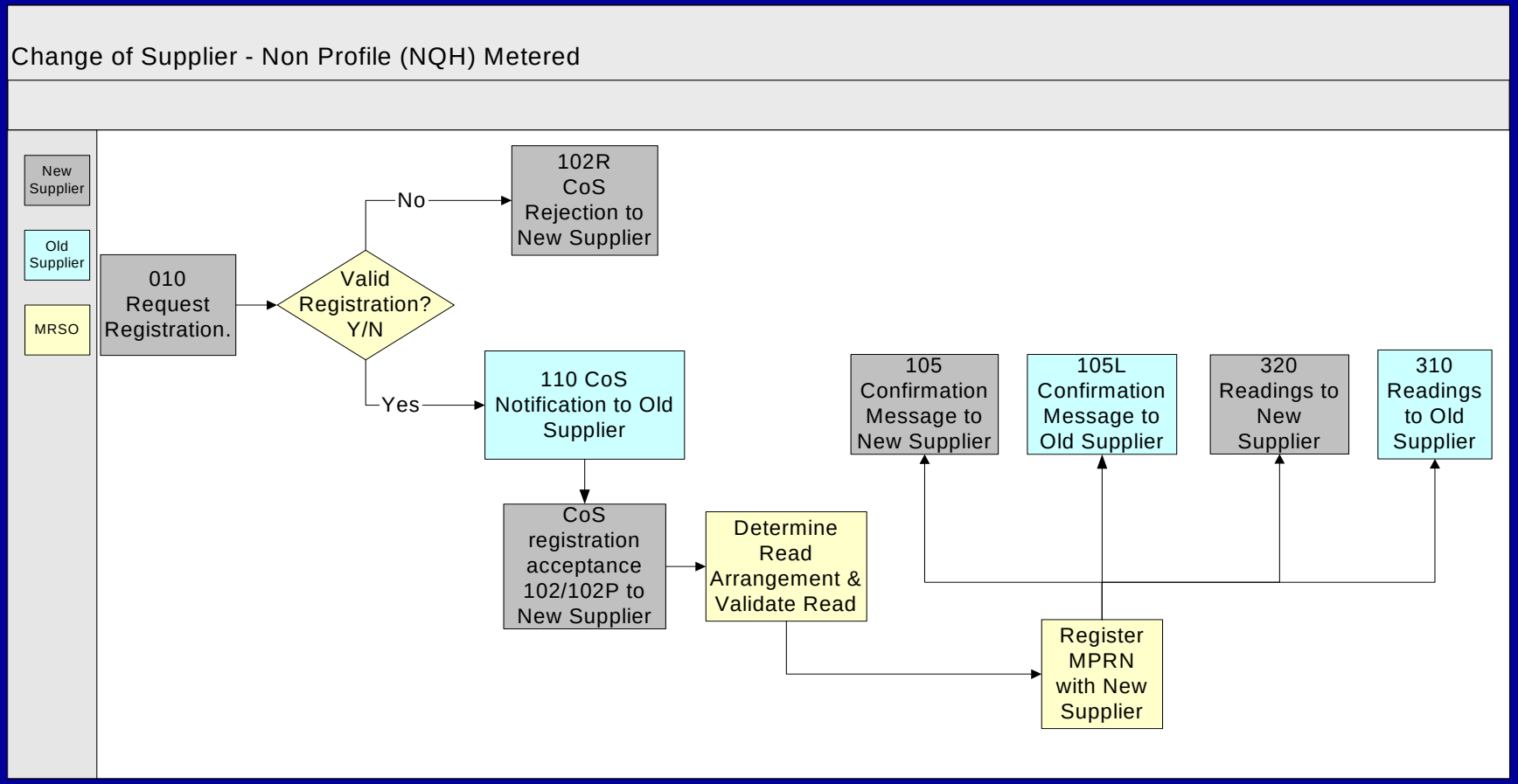

CoS - Key Points

- MRSO will select a reading for use as the CoS read based on supplier instructions
- Where reads cannot be obtained MRSO will estimate, with agreement from the New Supplier
- Successful CoS requests will result in energisation of the site where the site is not already energised
- CoS can be combined with limited meter works requests
- CoS Objection process exists where the customer is Erroneously Transferred.
- Process for QH customers is similar

New Connections MPDs 5,6 & 7

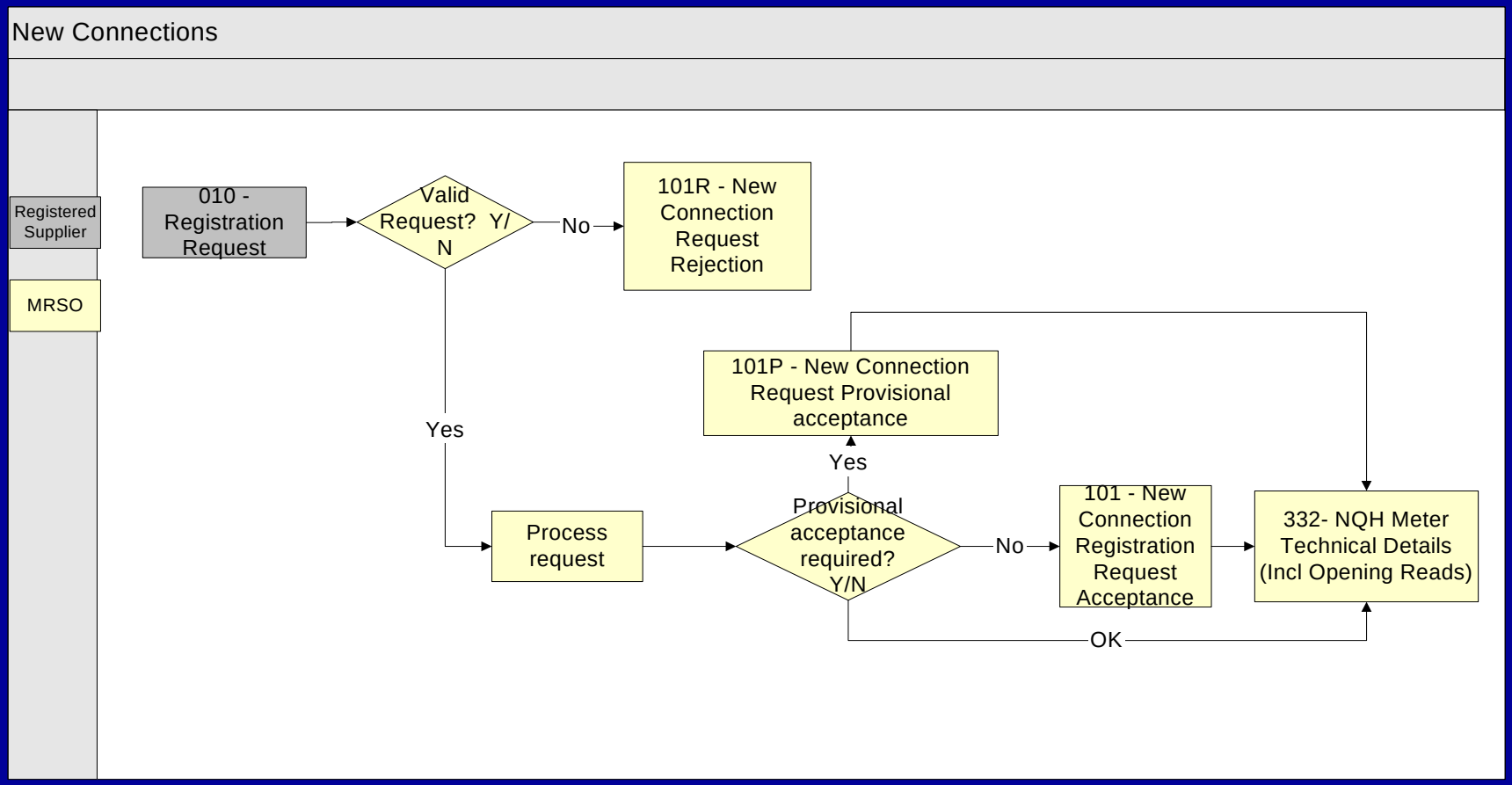

New Connections – Key Points

- New Connections process initiated by the customer
- Supplier registrations may take place once MPRN is assigned
- Information to assist in the generation of a valid request will be available via the MPRN publication web-site
- Customers under 30 kVA may default to the Supplier of Last Resort five days after energisation if no other supplier registration exists.
- For other customers a supplier registration is required before energisation
- Similar process exists for QH customers

Change of Legal Entity (CoLE) MPD 25

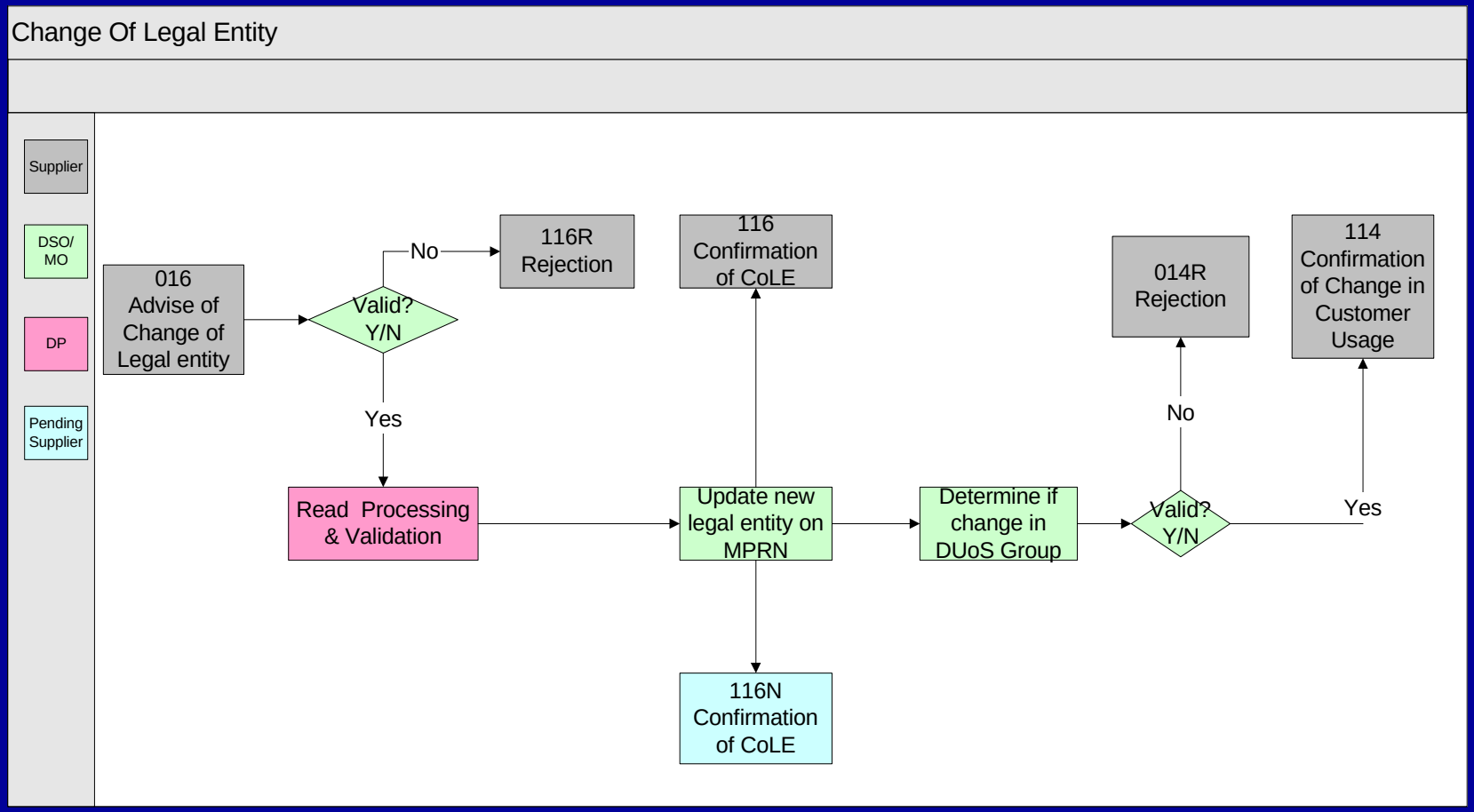

CoLE Key Points

- For Non MD NQH customers Suppliers may choose to provide a reading. Otherwise MRSO will generate an estimate.
- Change of Legal Entity requires DSO to obtain a new Connection Agreement. For smaller customers this may be a Deemed Connection agreement

Change of Customer Details MPD 24

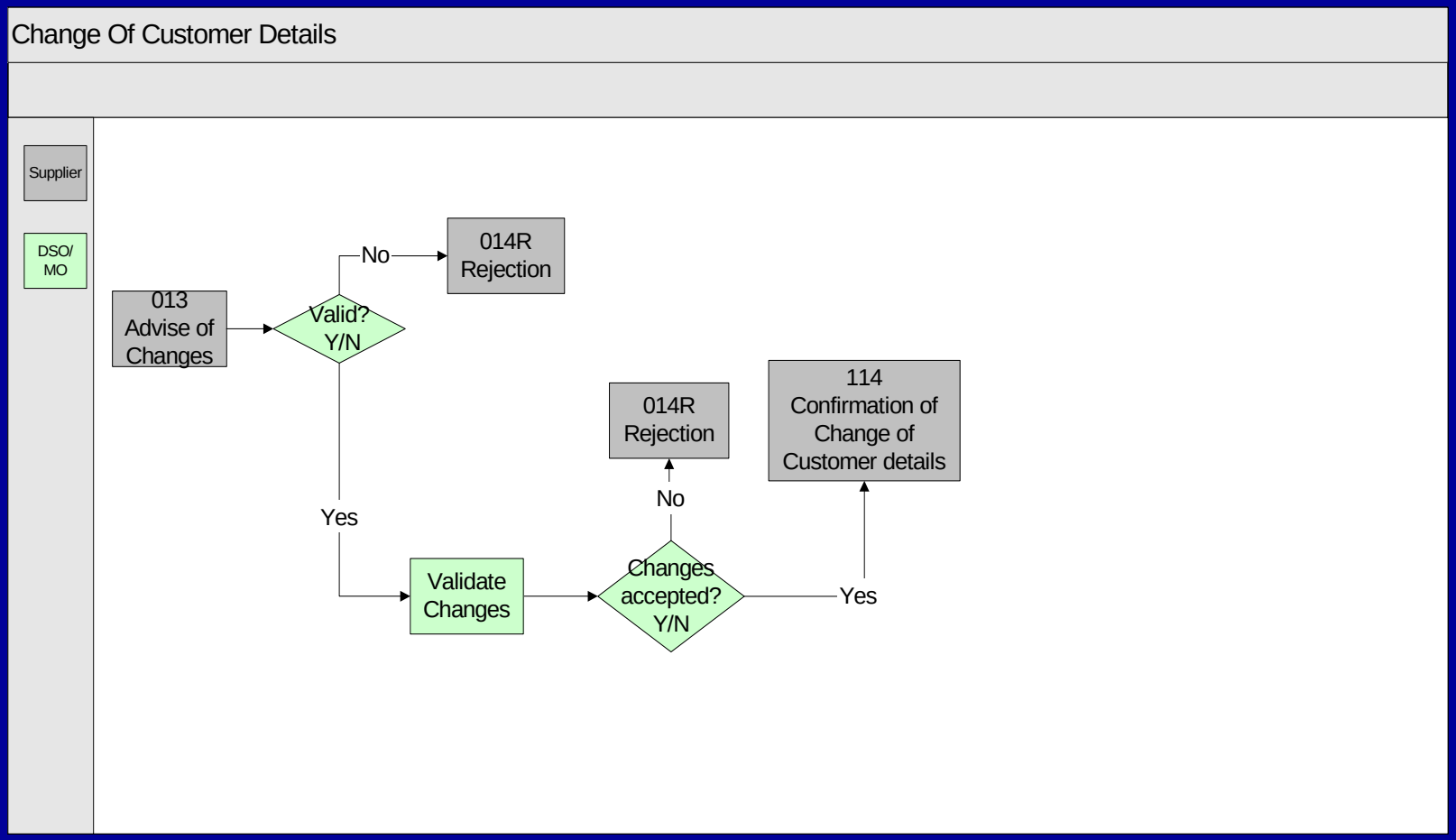

Change of Customer Details

- Process includes changes to:

  Meter Point Address

  Customer Name

  Customer contact details

  Usage type (i.e. DUoS Group)
- Suppliers should inform DSO of any Change to Customer Details as per Use of System Agreement
- If a Supplier notifies multiple changes on one 013 message, then multiple rejections/acceptances may be received. Suppliers may prevent this by requesting changes on more than one 013 message

Meter Works

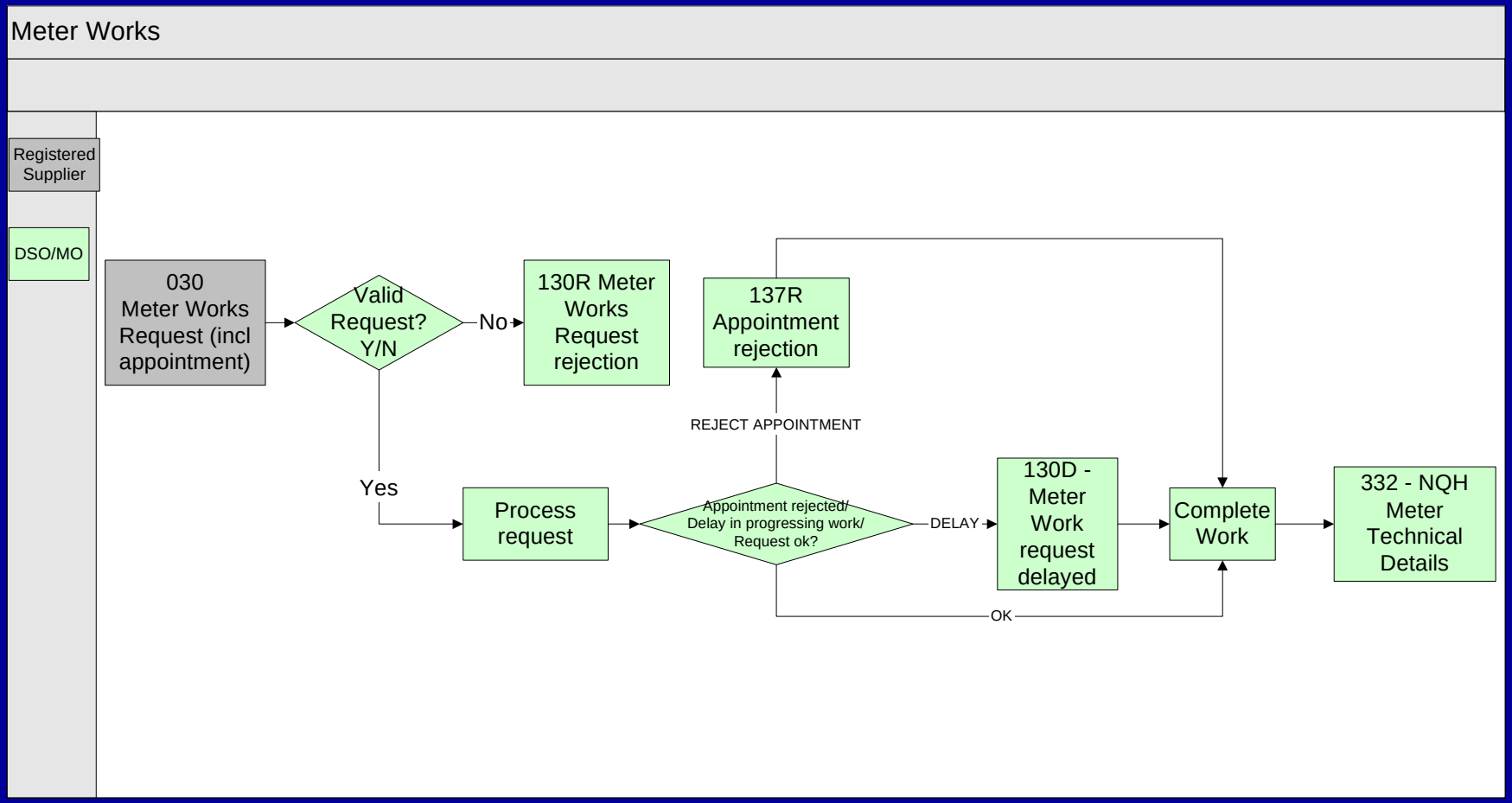
Meter Works
Registered Supplier
DSO/MO
030 Meter Works Request (incl appointment)
Valid Request? Y/N
No
130R Meter Works Request rejection
137R Appointment rejection
REJECT APPOINTMENT
Yes
Process request
Appointment rejected/ Delay in progressing work/ Request ok?
DELAY
130D - Meter Work request delayed
Complete Work
332 - NQH Meter Technical Details
OK

Meter Works – Key Points

- Appointments can be flagged (for certain call types only)
- Readings will be provided for all cases where Meter Works have taken place.
- The process for de-energisations and re-energisations follow a similar line.

QH Meters

- A QH site may physically have multiple readers and recorders. Only 1 meter will be used to communicate with the market. Totalising of multiple meters into a single data stream (per channel) is performed by QHDC
- QHDC applies any multipliers and/or transformer loss factors prior to sending data to MRSO. Multipliers are not communicated to the market; the TLF is communicated on the 341 message
- The 341 message is used by Networks to send data nightly, broken down by 15 minute intervals.

QH Meters- who receives 341 messages?

- Suppliers
  - For MPRNs registered to them:
    - Gross import kW;
    - net import kWh (autoproducer sites only)
    - import kVA
- Generators
  - For their site:
    - Gross Export kW
    - Export kVAr (if measured)
  - Generators can nominate a supplier to receive messages on their behalf
- TSO
  - For all MPRNs:
    - Same data as suppliers for all MPRNs.

NQH Meters – Data Processing MPD 14

- A reading, or estimate in cases where a plausible read was not obtained, will be passed to the supplier every two months
- Updated usage factors will also be provided where actual, plausible reads have been obtained
- NQH scheduled readings may be received on 2 messages (300 and 305) depending on read type issued
- Readings for one MPRN only issued on each message
- Message 300 may contain a mixture of actuals and estimates

NQH Meter Reads Provided by Suppliers

NQH Non MD meter reads may be provided by Suppliers on message 210 in the following circumstances:

- Change of Supplier
- Change of Legal Entity
- Replacement reading for CoS (usually sent on a 208 message)
- Where a customer read is received by the Supplier and is sent to Networks for billing purposes
- Out of Cycle Customer Reading

Meter reads provided by Suppliers (Continued)

Meter Reads will be rejected if they relate to:

- An incorrect MPRN
- An incorrect set of meters, registers or timeslots
- An MD site
- A time period outside the permitted timeframe
- A supplier who is not registered or has a pending registration to the site

N.B. Where implausible reads are received these will not be rejected but instead will be ignored and a set of estimates generated

NQH Meter Readings – withdrawal process

In certain circumstances MRSO may choose to reverse a reading. Examples include:

- Where a CoS read is disputed and that dispute is upheld
- Where an estimate is subsequently proved incorrect
- Where a reading is sent for an incorrect meter, register etc

DUoS Billing

DUoS Billing

DUoS Charge Billing

- Suppliers will be invoiced twice a month

Transactional billing

- Suppliers will be invoiced at month end for transactions carried out in that month

PSO Billing

- Suppliers will be invoiced for customers registered to them at month end

Invoices, plus supporting documentation, will be sent to the supplier via CD Rom with hard copies of documents also issuing

DUoS and Transactional Billing Disputes Process MPD 34

Upon receipt of the DUoS bill Suppliers may choose to:

- Accept the invoice and pay in full by EFT
- Raise a Designated Dispute and send payment for all non disputed items. In this case the Supplier should notify ESB Networks of all disputed items by sending a 507 message for each item
- Raise a Non Designated Dispute and send payment in full for the amount on the invoice. Such disputes should be communicated manually to the office stated on the DUoS invoice
- In all cases the Supplier should send a 507C as this allows Networks to allocate the supplier's payments against the current and any previous invoices

PSO Billing Disputes Process MPD 34

- All PSO disputes, designated or non designated, should be communicated manually to ESB Networks.
- Suppliers cannot withhold payment for any PSO related disputes

For further details see ‘DUoS, Transaction and PSO Payment Processing V1.0’ on RMIG Web-site

Documentation

- All relevant documentation can be found on the RMIG website
  - www.rmig.cer.ie
  - Username: RMIG
  - Password: fuinnimh