The Retail Market

New Entrants

Introduction

- The following presentation will briefly outline the background to the Retail Electricity market and also the present day position of ESB Networks.
- An overview of the initial process and a description of the Market Participant requirements will also be discussed for new entrants wishing to enter the Retail Electricity Market.
- A brief description of the communications fora within the Market will also be outlined.

Agenda

- Background of the Retail Electricity Market
- Structure of the Retail Market
- Role of ESB Networks Teams
- Role of CER
- Requirements for New Entrants
- Process for New Entrants
- Communications between Market Participants
- Market Assurance
- Documentation

Background to Retail Electricity Market

Background to Retail Electricity Market

- The Electricity Regulation Act 1999 led to the deregulation of the Retail Electricity Market and the overall opening up of this market to other Electricity Suppliers.
- The Commission for Energy Regulation (CER) was established which is the independent body responsible for overseeing the liberalisation of Ireland's energy sector
- The MOIP (Market Opening IT Programme) was set up by ESB Networks to allow an efficient and timely market opening to take place
- SAP IS-U was the chosen IT Support System by MOIP to implement market opening

Background to Retail Electricity Market

- A number of Suppliers competed for commercial and industrial customers following initial market opening.
- Suppliers are now free to compete for residential customers also
- Go Live of the system was in January 2005

Overview - Stages in Opening of Market

Event	Impact /eligible customers
1999: Electricity Regulation Act.	CER established.
19th Feb 2000: 1999 Act, Sec 27(2)	> 4.0 GWh => 400 + Green
19th Feb 2002 S.I. No 3 of 2002	>1.0 GWh => + 1,200 *(40%)*
19th Feb 2004 S.I. No 632 of 2003	> 0.1GWh => + 12,000 *(56%)*[150]
19th Feb 2005 S.I. No. 0f 2004	> 0.1 kWh => 1.7m

Overview - Other Provisions of 1999 Act

- **Trading & Settlement Code (v1.0) put in place**
- **Meter Operator transferred to Networks**
- **Meter Registration Services Operator set up to:**
  - manage Change of Supplier process
  - Data Processing and Aggregation services for settlement
    - *Conditons 8 - Meter Point Registration Serivice,*
    - *9 Metering and Data Services and*
    - *18 Separation of Distribution Business of DSO Licence*

Structure of the Retail Market

Structure of the Retail Market

- Data Collector
- Meter Operator
- Distribution System Operator
- Meter Registration System Operator - MR, DP, DA
- Transmission System Operator
- Settlement System Administrator
- Suppliers (incl. PES)

Role of ESB

- ESB fill a number of different market roles
  - ***ESB Networks*** will deliver the Data Collector, Meter Operator and Distribution System Operator roles.

    DSO Licence June 01
  - ***ESB Networks*** through its ***Metering and Registration System Operator*** (MRSO) function, is also responsible for providing Metering Registration, Data Processing and Data Aggregation:

    DSO Licence June 01 - Conditions 8 and 9
  - From a supply perspective ***ESB Customer Supply*** in exercising its PES and Supplier of Last Resort roles has a role in the facilitation of the competitive market.

Structure of the Retail Market

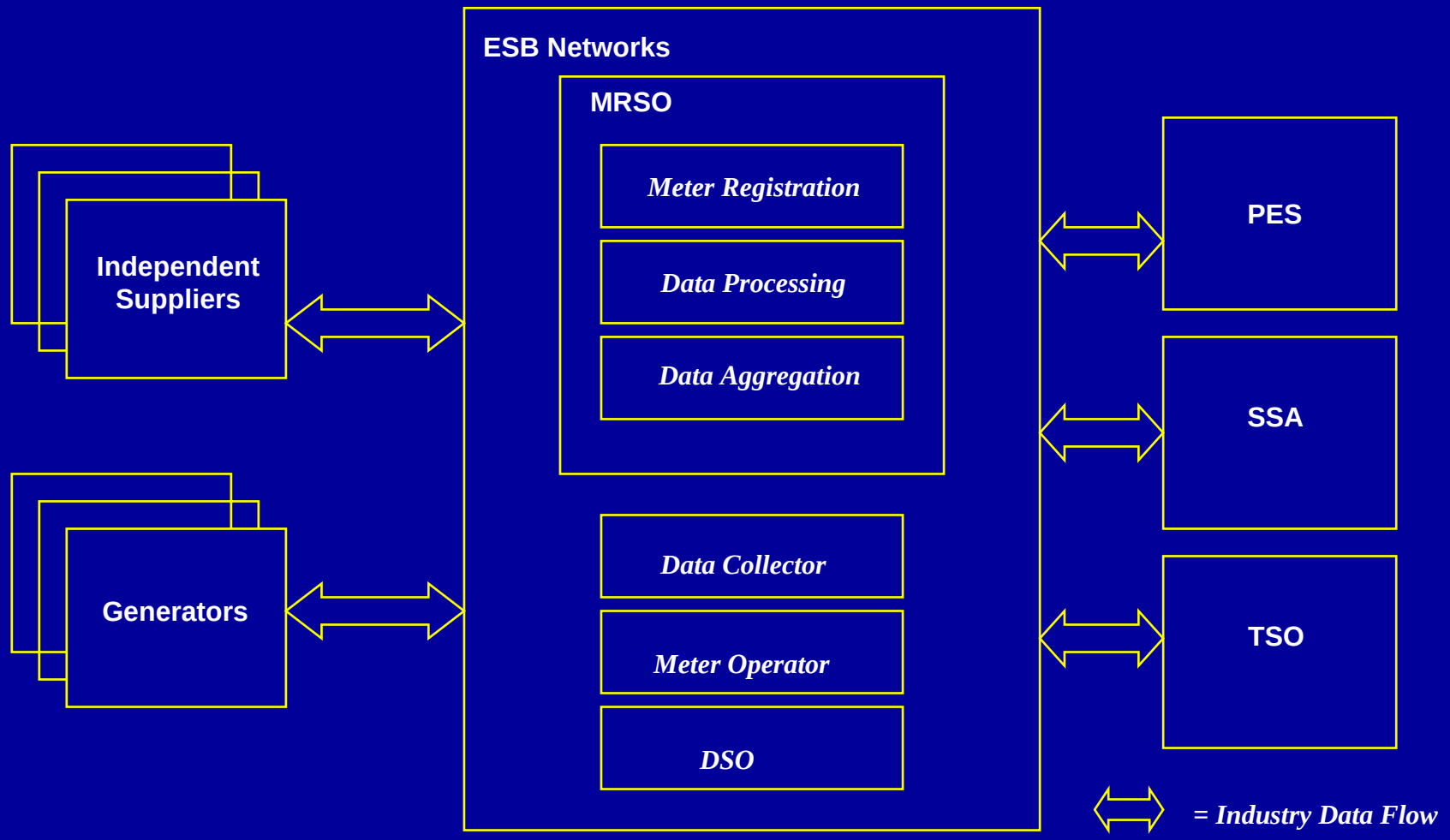

Role of ESB Networks Teams

Role of ESB Networks Teams

The market facing teams within ESB Networks are:

- MRSO
  - Meter Registration
  - Data Processing
  - Data Aggregation
- Meter Operator
  - New Connections
  - Meter Works
  - Finance
  - Customer Service
- Data Collector

Role of ESB Networks Teams

- MOIEX
  - Deliver all interface requirements for MOIP
  - Deliver the Interface Infrastructure – 'The Hub'
  - Deliver and support the MPCC

- Design Administrator
  - RMDS (Retail Market Design Services)

- Secretariat to the IGG (Industry Governance Group)
- Organise and carry out presentations regarding IGG and TAG (Technical Advisory Group)

Role of ESB Networks Teams

- Carry out actions arising from IGG and relay information to Market Participants
- Resolving Market Participant Queries with the Creation and development of change requests, defects and discussion requests raised by MPs
- Creation and Updating of Market Design documentation
- Primary communicators between ESB Networks & Market Participants
- Release Planning

Design Administrator Role

- CER finalised the terms of reference for this role on the 25th January 2006.
- The Commission defined the overall role of the Design Administrator as follows:

  The role of the Design Administrator shall involve the cost effective support for and delivery of quality systems that will help achieve the Commission's objectives of encouraging competition in supply markets and quality of service to all customers.

Role of CER

Role of CER

- CER is responsible for ensuring that Market Opening is construed in such a fashion that is fair and equal to all Market Participants
- The CER is working to ensure that consumers benefit from regulation and the introduction of competition in the energy sector
- CER are responsible for granting licenses to new market entrants
- CER attend every IGG where they provide updates to MPs

Role of CER

- It is the responsibility of CER to approve or reject requested changes to the Market Design and determine scope of implementation of future system releases

Requirements for New Entrants

Requirements for New Entrants – Legislative Framework

Primary Documents

- Supplier Licence

Governing:

- Codes
  - De-energisation (supplier)
  - Billing and Payment Options
  - Vulnerable Customers
  - Complaints Handling Procedure
  - Marketing/Selling
  - Standard contract terms and conditions

- DSO Licence

- Codes
  - Disconnection Code of Practice (cond 15)
  - Revenue Protection Code of Practice (cond 7)
  - Complaints Handling Procedure
  - Distribution Code (condition 26)
  - Metering Code
  - Access to Land and Premises (condition 14)
  - Customer Service Code of Practice (cond 15)

Requirements for New Entrants – Legislative Framework

Primary Documents:

- MRA Agreement

Governing:

- Services
  - List of Services
  - Charges

- DUoS Agreement

- Services
  - List of Services
  - Charges

Requirements for New Entrants

- New Entrant must obtain a license from CER to gain entry to the Market
- DUoS Agreement must be signed and activated by the new entrant
- MRA Agreement must be signed and agreed upon
- Trading & Settlement Code must be read and agreed upon
- Wholesale accession process must be completed by the New Entrant

Requirements for New Entrants

- New Entrant must provide an Escrow Account or letter of credit in order to prove that they are in a financially stable position
- Market Assurance as deemed necessary by Independent Auditors

New Entrant Process

New Entrant Process

- Providing the New Entrant satisfies the requirements for market entry, the entry process will proceed as follows:
  - New entrant is provided with all necessary training documentation and other relevant market documentation required
  - The National Grid assign a new MPID for the New Entrant
  - RMRTC as appointed by CER are contacted to test the MP systems and to review proposed business processes

New Entrant Process

- MP will meet with ESB Networks to discuss software implementation of the MPCC (Market Participant Communication Component). The MPCC is the software used by MPs to send market messages. The MP will be provided with all relevant MPCC documentation
- Connectivity testing will be carried out to establish connectivity between ESB Networks and the MP systems.
- Once all the above steps have been completed, the MP will be ready to become an active Market Participant

Communication between Market Participants

Communication between Market Participants

- IGG (Industry Governance Group)
  - Executive communications and decision-making forum for the oversight of the implementation of changes to *systems and processes* to support competition in electricity supply to customers
    - Review, comment upon and approve market design changes
    - Review development in other markets to determine impacts
    - Appoint and receive reports from Sub Groups as required
  - CER RMIG web-site:
    - http://www.rmig.cer.ie

Communication between Market Participants

- TAG (Technical Advisory Group)
  - Sub Group of IGG chaired by CER and operates in accordance with agreed ToR
  - Suppliers, ESB Networks (DSO and MRSO), SSA, TSO, DA, RMDS.
  - 6 weekly meeting cycle
  - Responsible for the review, agreement and implementation of technical standards and infrastructure necessary to support data exchange between participants in respect of the Retail Market

Communication between Market Participants

- Supplier Forum
  - Chaired by CER
  - Established to focus on progressing matters of interest to Suppliers but not directly related to the implementation of systems and processes supporting the Retail Market
    - revision to Supplier licences
    - agreement of codes of practice
    - prepayment metering,
    - customer awareness and education programme
  - Ad hoc meetings as required

Communication between Market Participants

- Market Participant Conference Call
  - Takes place every 2 weeks
  - Gives Market Participants the opportunity to voice any issues they have before the IGG or TAG meetings
  - Gives Networks the opportunity to update MPs on any new issues arising of which they may not be aware and of any issues that have been resolved.

Market Assurance

Market Assurance

- The focus of the Market Assurance process from a New Entrant perspective is to look at the New Entrants systems and business processes to assure CER that the participant can operate successfully without impacting on other MPs.
- The Assurance body are appointed by CER to carry out Market Assurance with the aid of ESB Networks where necessary
- Where significant changes are made to an MPs back end system or to the Retail Market Design further assurance may be required

Market Assurance

- Market assurance may involve a number of key checks:
  - BSA (Business Solution Assessment)- This is a review of business processes to ensure all staff understand the design
  - Review of test plans to determine if adequate testing of these processes and solutions
  - DTT/Connectivity Testing -DTT involves transferring data from new entrant systems to ESB networks systems so as to determine the level of connectivity

Market Assurance

- IPT (Inter Participant Testing) – full run through of key business processes from end to end

Documentation

- All relevant documentation regarding licensing and codes of agreement can be found on the RMIG website
  - www.rmig.cer.ie
  - Username: RMIG
  - Password: fuinnimh